5

Fuel Cells

5.1 Fuel Cells – A Real Option?

Fuel cells are hardly a new idea. The hydrogen fuel cell was invented in about 1840, but fuel cells are yet really to make their mark as a power source for EVs. However, this might be set to change over the next 20 or 30 years. Certainly most of the major motor companies are spending very large sums of money developing fuel-cell-powered vehicles.

The basic principle of the fuel cell is that it uses hydrogen fuel to produce electricity in a battery-like device to be explained in the next section. The basic chemical reaction is

$$2H_2 + O_2 \rightarrow 2H_2O \tag{5.1}$$

The product is thus water and energy. Because the types of fuel cells likely to be used in vehicles work at quite modest temperatures (~85 °C) there is no nitrous oxide produced due to reactions between the components of the air used in the cell. A fuel cell vehicle could thus be described as 'zero emissions'. Furthermore, because fuel cells run off a fairly normal chemical fuel (hydrogen), very reasonable energies can be stored, and the range of fuel cell vehicles is potentially quite satisfactory. This thus offers the only real prospect of a silent, zero-emission vehicle with a range and performance broadly comparable with IC engine vehicles. It is not surprising then that there have, for many years, been those who have seen fuel cells as a technology that shows great promise, and that they could make serious inroads into the domination of the IC engine. Such ideas regularly surface in the science and technology community, and Figure 5.1, showing a recent cover of the prestigious *Scientific American* magazine, is but one example.

Many demonstration fuel-cell-powered cars of very respectable performance have been made. However, there are many problems and challenges for fuel cells to overcome before they become a commercial reality as a vehicle power source. The main problems centre around these issues:

1. **Cost:** Fuel cells are currently far more expensive that IC engines, and even hybrid IC/electric systems. The reasons for this are explained in Section 5.4, where we consider how a fuel cell system is made, and Section 5.7, where we discuss the extent of the equipment that needs adding to a fuel cell to make a working system.

Electric Vehicle Technology Explained, Second Edition. James Larminie and John Lowry.
© 2012 John Wiley & Sons, Ltd. Published 2012 by John Wiley & Sons, Ltd.

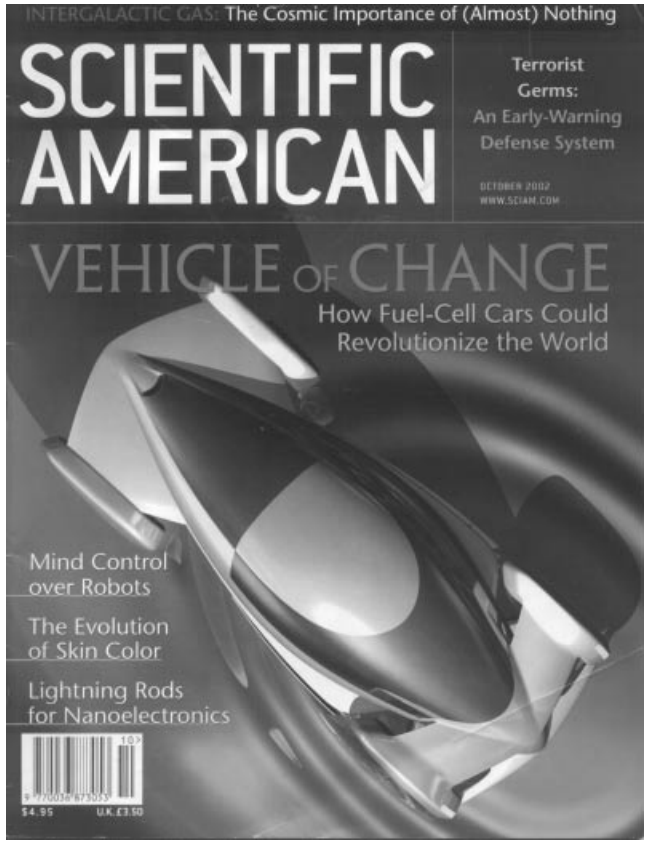

Figure 5.1 The front cover of the October 2002 issue of the magazine *Scientific American*. Articles within outline the possibilities presented by fuel-cell-powered EVs (Reproduced by kind permission of Scientific American)

2. **Rival technology:** Hydrogen is a fuel, and it can be used with exactly the same overall chemical reaction as Equation (5.1) in an IC engine. Indeed, cars have been produced with fairly conventional engines running off hydrogen, notably by BMW in Germany. The emissions from these vehicles are free from carbon monoxide, carbon dioxide, hydrocarbons, and virtually all the unpleasant pollution associated with cars – the only pollutant is a small amount of nitrous oxide. Considering the reduced cost and complexity, is this a better solution? To answer this question we need to look at the efficiency of a fuel cell, and see how it compares with an IC engine. The basic thermodynamics is covered in Section 5.3.
3. **Water management:** It is not at all self-evident why water management should be such an important and difficult issue with automotive fuel cells, so Section 5.5 is devoted to explaining this problem.
4. **Cooling:** The thermal management of fuel cells is actually rather more difficult than for IC engines. The reasons for this, and the solutions, are discussed in Section 5.6.

5. **Hydrogen supply:** Hydrogen is the preferred fuel for fuel cells, but hydrogen is very difficult to store and transport. There is also the vital question 'Where does the hydrogen come from?' These issues are so difficult and important, with so many rival solutions, that we have dedicated a whole chapter to them, Chapter 6.

However, there is great hope that these problems can be overcome, and fuel cells can be the basis of less environmentally damaging transport. Many of the problems are more easily solved, and the benefits are more keenly felt, with vehicles such as buses that run all day, in large cities. Such a vehicle is shown in Figure 5.2, and they have been used in several major cities in Canada, the USA and Europe. Many thousands of people will have taken journeys in a fuel-cell-powered vehicle – though many of them will not have noticed it. So before we consider the major problems with fuel cells, we will explain how these interesting devices work.

5.2 Hydrogen Fuel Cells – Basic Principles

5.2.1 Electrode Reactions

We have seen that the basic principle of the fuel cell is the release of energy following a chemical reaction between hydrogen and oxygen. The key difference between this and simply burning the gas is that the energy is released as an electric current, rather that heat. How is this electric current produced?

To understand this we need to consider the separate reactions taking place at each electrode. These important details vary for different types of fuel cell, but if we start

Figure 5.2 A fuel-cell-powered bus in use in Germany. Vehicles like this, used all day in cities, and refuelling at one place, are particularly suited to being fuel cell powered. (Reproduced by kind permission of MAN Nutzfahrzeuge AG.)

with a cell based around an acid electrolyte, we will start with the simplest and the most common type.

At the anode of an *acid electrolyte* fuel cell the hydrogen gas ionises, releasing electrons and creating H^+ ions (or protons):

$$2H_2 \rightarrow 4H^+ + 4e^- \tag{5.2}$$

This reaction releases energy. At the cathode, oxygen reacts with electrons taken from the electrode, and H^+ ions from the electrolyte, to form water:

$$O_2 + 4e^- + 4H^+ \rightarrow 2H_2O \tag{5.3}$$

Clearly, for both these reactions to proceed continuously, electrons produced at the anode must pass through an electric circuit to the cathode. Also, H^+ ions must pass through the electrolyte. An acid is a fluid with free H^+ ions, and so serves this purpose very well. Certain polymers can also be made to contain mobile H^+ ions. These materials are called 'proton exchange membranes' (PEMs), as an H^+ ion is also a proton, and their construction is explained below in Section 5.5.

Comparing Equations (5.2) and (5.3) we can see that two hydrogen molecules will be needed for each oxygen molecule if the system is to be kept in balance. This is shown in Figure 5.3. It should be noted that the electrolyte must only allow H^+ ions to pass through it and not electrons. Otherwise, the electrons would go through the electrolyte, not round the external circuit, and all would be lost.

5.2.2 *Different Electrolytes*

The reactions given above may seem simple enough, but they do not proceed rapidly in normal circumstances. Also, the fact that hydrogen has to be used as a fuel is a disadvantage. To solve these and other problems many different fuel cell types have been tried. These different types are usually distinguished by the electrolyte that is used, though there are always other important differences as well. Most of these fuel cells have somewhat different electrode reactions than those given above; however, such details are given elsewhere (e.g. Larminie and Dicks, 2003).

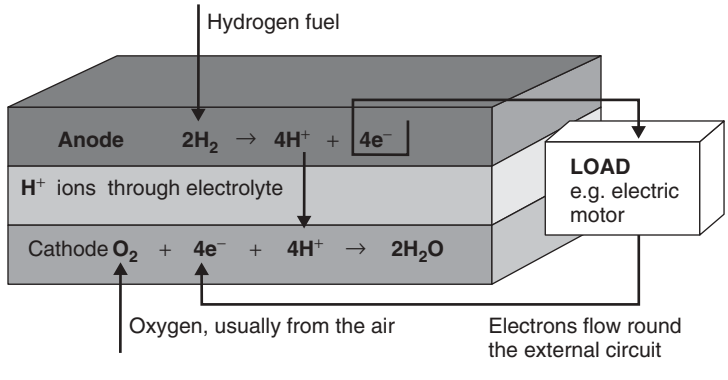

Figure 5.3 The reactions at the electrodes, and the electron movement, in a fuel cell with an acid electrolyte

The situation now is that six classes of fuel cell have emerged as viable systems for the present and near future. Basic information about these systems is given in Table 5.1.

As well as facing up to different problems, the various fuel types also try to play to the strengths of fuel cells in different ways. The **PEM fuel cell** capitalises on the essential simplicity of the fuel cell. The electrolyte is a solid polymer, in which protons are mobile. The chemistry is the same as the acid electrolyte fuel cell of Figure 5.3. With a solid and immobile electrolyte, this type of cell is inherently reasonably simple, and it is the type that shows by far the most promise for vehicles, being the type used on all the most impressive demonstration fuel cell vehicles. This type of fuel cell is the main focus of this chapter.

PEM fuel cells run at quite low temperatures, so the problem of slow reaction rates has to be addressed by using sophisticated catalysts and electrodes. Platinum is the catalyst, but developments in recent years mean that only minute amounts are used, and the cost of the platinum is a small part of the total price of a PEM fuel cell. The problem of hydrogen supply is not really addressed – quite pure hydrogen *must* be used, though various ways of supplying this are possible, as discussed in Chapter 6.

One theoretically very attractive solution to the hydrogen supply problem is to use methanol[1] as a fuel instead. This can be done in the PEM fuel cell, and such cells are called **direct methanol fuel cell**s **(DMFC)**s – 'direct' because they use the methanol as the fuel as it is, in liquid form, as opposed to extracting the hydrogen from it using one of the methods described in Chapter 5. Unfortunately these cells have very low power, and for the foreseeable future at least, their use will be restricted to applications requiring slow and steady generation of electricity over long periods. A demonstration DMFC-powered

Table 5.1 Data for different types of fuel cell

Fuel cell type	Mobile ion	Operating temperature (°C)	Applications and notes
Alkaline (AFC)	OH^-	50–200	Used in space vehicles, for example Apollo, Space Shuttle
Proton exchange membrane (PEMFC)	H^+	30–100	Vehicles and mobile applications, and for lower power CHP systems
Direct methanol (DMFC)	H^+	20–90	Suitable for portable electronic systems of low power, running for long times
Phosphoric acid (PAFC)	H^+	~220	Large numbers of 200 kW CHP systems in use
Molten carbonate (MCFC)	CO_3^{2-}	~650	Suitable for medium to large-scale CHP systems, up to megawatt capacity
Solid oxide (SOFC)	O^{2-}	500–1000	Suitable for all sizes of CHP systems, 2 kW to multiple megawatts

[1] A fairly readily available liquid fuel, formula CH_3OH.

go-kart has been built, but really the only likely application of this type of cell in the near future is in the rapidly growing area of portable electronics equipment.

Although PEMFCs were used on the first manned spacecraft, the **alkaline fuel cell (AFC)** was used on the Apollo missions and on the Shuttle Orbiter. The problem of slow reaction rate is overcome by using highly porous electrodes, with a platinum catalyst, and sometimes by operating at quite high pressures. Although some historically important alkaline fuel cells have operated at about 200 °C, they more usually operate below 100 °C. The alkaline fuel cell has been used by a few demonstration EVs, always in hybrid systems with a battery. They can be made more cheaply than PEMFCs, but they are lower in power, and the electrolyte reacts with carbon dioxide in the air, which make terrestrial applications difficult.

The **phosphoric acid fuel cell (PAFC)** was the first to be produced in commercial quantity and enjoy widespread terrestrial use. Many 200 kW systems, manufactured by the International Fuel Cells Corporation, are installed in the USA and Europe, as well as systems produced by Japanese companies. However, they are not suitable for vehicles, as they operate at about 220 °C and do not react well to being cooled down and restarted – they are suited to applications requiring power all the time, day after day, month after month.

As is the way of things, each fuel cell type solves some problems, but brings new difficulties of its own. The **solid oxide fuel cell (SOFC)** operates in the region of 600–1000 °C. This means that high reaction rates can be achieved without expensive catalysts, and that gases such as natural gas can be used directly, or 'internally reformed' within the fuel cell – they do not have to have a hydrogen supply. This fuel cell type thus addresses some of the problems and takes full advantage of the inherent simplicity of the fuel cell concept. Nevertheless, the ceramic materials that these cells are made from are difficult to handle, so they are expensive to manufacture, and there is still quite a large amount of extra equipment needed to make a full fuel cell system. This extra plant includes air and fuel pre-heaters, also the cooling system is more complex, and they are not easy to start up. No one is developing these fuel cells as the motive power unit for vehicles, but some are developing smaller units to provide the electric power for air-conditioning and other systems on modern 'conventional' engine vehicles, which have very high electric power demands these days. However, that is not the focus of this book.

Despite operating at temperatures of up to 1000 °C, the SOFC always stays in the solid state. This is not true for the **molten carbonate fuel cell (MCFC)**, which has the interesting feature that it needs the carbon dioxide in the air to work. The high temperature means that a good reaction rate is achieved using a comparatively inexpensive catalyst – nickel. The nickel also forms the electrical basis of the electrode. Like the SOFC it can use gases such as methane and coal gas (H_2 and CO) as fuel. However, this simplicity is somewhat offset by the nature of the electrolyte, a hot and corrosive mixture of lithium, potassium and sodium carbonates. They are not suitable for vehicles,[2] as they only work well as rather large systems, running all the time.

So, fuel cells are very varied devices, and have applications way beyond vehicles. For the rest of this chapter we will restrict ourselves to the PEMFC, as it is by far the most important in this context.

[2] Except ships.

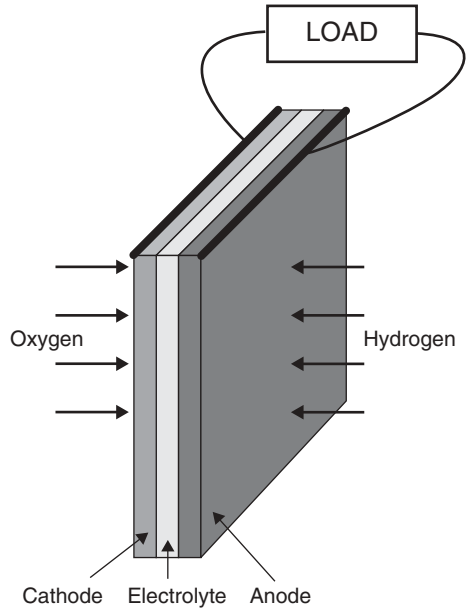

Figure 5.4 Basic cathode–electrolyte–anode construction of a fuel cell. Note that the anode is the negative terminal and the cathode the positive one. This may seem counter to expectations, but is in fact true for all primary cells. The rule is that the cathode is the terminal that the electrons flow *into*. So, in electrolysis cells the cathode is the negative terminal

5.2.3 Fuel Cell Electrodes

Figure 5.4 is another representation of a fuel cell. Hydrogen is fed to one electrode and oxygen, usually as air, to the other. A load is connected between the two electrodes, and current flows. However, in practice a fuel cell is far more complex than this. Normally the rate of reaction of both hydrogen and oxygen is very slow, which results in a low current, and so a low power. The three main ways of dealing with the slow reaction rates are:

- the use of suitable catalysts on the electrode;
- raising the temperature;
- increasing the electrode area.

The first two can be applied to any chemical reaction. However, the third is special to fuel cells and is very important. If we take a reaction such as that of Equation (1.3), we see that oxygen gas, H^+ ions from the electrolyte and electrons from the circuit are needed, all three together. This 'coming together' must take place *on the surface of the electrode*. Clearly, the larger the electrode area, the more scope there is for this to happen, and the greater the current. This is very important. Indeed, electrode area is such a vital issue that the performance of a fuel cell design is often quoted in terms of the current *per square centimetre*.

The structure of the electrode is also important. Electrodes are made highly porous so that their real surface area is much greater than the normal length $\times$ width.

As well as being of a large surface area, and highly porous, a fuel cell electrode must also be coated with a catalyst layer. In the case of the PEMFC this is platinum – very expensive. The catalyst thus needs to be spread out as finely as possible. This is normally done by supporting very fine particles of the catalyst on carbon particles. Such a carbon-supported catalyst is shown for real in Figure 5.5 and in idealised form in Figure 5.6.

The reactants need to be brought into contact with the catalyst, and a good electrical contact needs to be made with the electrode surface. Also, in the case of the cathode,

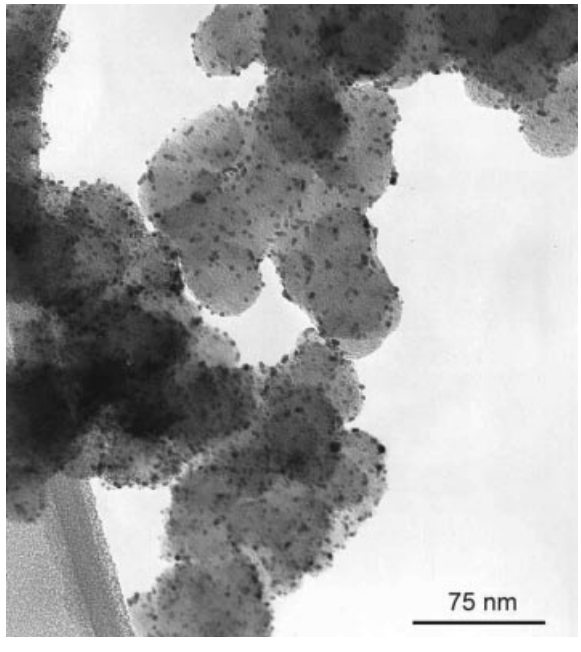

Figure 5.5 Electron microscope image of some fuel cell catalyst. The black specks are the catalyst particles finely divided over larger carbon supporting particles. (Reproduced by kind permission of Johnson Matthey plc.)

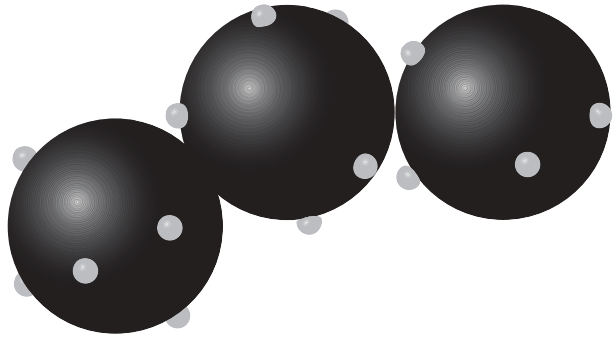

Figure 5.6 The structure, idealised, of carbon-supported catalyst

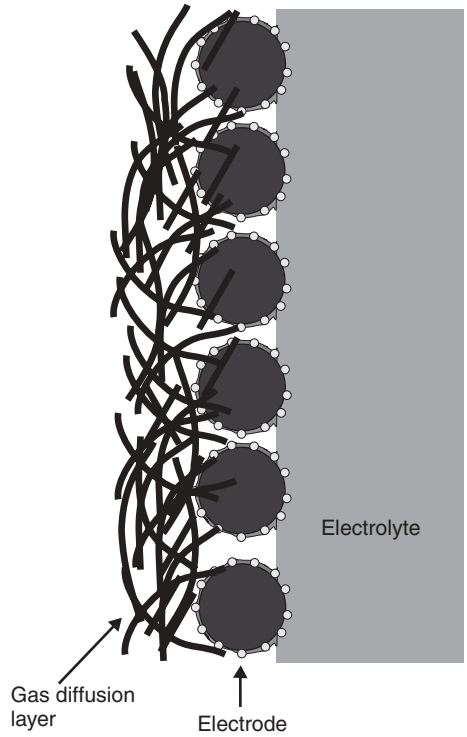

Figure 5.7 Simplified and idealised structure of a PEMFC electrode

the product water needs to be removed. These tasks are performed by the 'gas diffusion layer', a porous and highly conductive material such as carbon felt or carbon paper, which is layered on the electrode surface.

Finally, some of the electrode is allowed to permeate over the surface of the carbon-supported catalyst to increase the contact between reactants. The resulting structure is shown, in somewhat idealised form, in Figure 5.7. All items shown in this diagram are in reality very thin. The electrolyte is about 0.05–0.1 mm thick, and each electrode is about 0.03 mm thick, with the gas diffusion layers each about 0.2–0.5 mm thick. The whole anode/electrolyte/cathode assembly, often called a 'membrane electrode assembly' or MEA is thus typically about 1 mm thick, including the gas diffusion layers.

5.3 Fuel Cell Thermodynamics – An Introduction

5.3.1 Fuel Cell Efficiency and Efficiency Limits

One of the attractions of fuel cells is that they are *not* heat engines. Their thermodynamics are different, and in particular their efficiency is potentially greater as they are not limited by the well-known 'Carnot limit' that impinges on IC and other types of fuel-burning engines. However, as we will see, they do have their own limitations, and while fuel cells are often more efficient than IC engines, the difference is sometimes exaggerated.

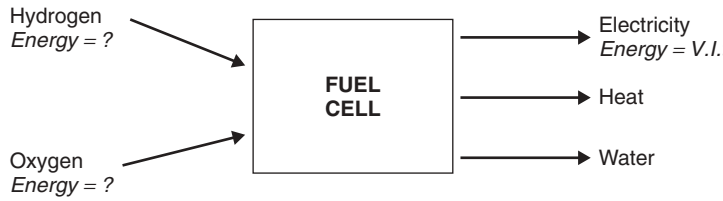

Figure 5.8 Fuel cell inputs and outputs

At first we must acknowledge that the efficiency of a fuel cell is not straightforward to define. In some electrical power generating devices it is very clear what form of energy is being converted into electricity. With a fuel cell such energy considerations are much more difficult to visualise. The basic operation has already been explained, and the input and outputs are shown in Figure 5.8. The electrical power and energy *output* are easily calculated from the well-known formulae

$$\text{Power} = VI \quad \text{and} \quad \text{Energy} = VIt$$

However, the energy of the chemical inputs and output is not so easily defined. At a simple level we could say that it is the 'chemical energy' of the H_2, O_2 and H_2O that is in question. The problem is that 'chemical energy' is not simply defined – and terms such as enthalpy, Helmholtz function and Gibbs free energy are used. In recent years the useful term 'exergy' has become quite widely used, and the concept is particularly useful in high-temperature fuel cells, though we are not concerned with these here. There are also older (but still useful) terms such as calorific value.

In the case of fuel cells it is the Gibbs free energy that is important. This can be defined as the 'energy available to do external work, neglecting any work done by changes in pressure and/or volume'. In a fuel cell the 'external work' involves moving electrons round an external circuit – any work done by a change in volume between the input and output is not harnessed by the fuel cell. Exergy is *all* the external work that can be extracted, including that due to volume and pressure changes. Enthalpy, simply put, is the Gibbs free energy plus the energy connected with the entropy. The enthalpy H, Gibbs free energy G and entropy S are connected by the well-known equation

$$G = H - TS$$

The energy that is released by a fuel cell is the *change* in Gibbs energy before and after a reaction – so the energy released can be represented by the equation

$$\Delta G = G_{outputs} - G_{inputs}$$

However, the Gibbs free energy change is *not constant*, but changes with temperature and state (liquid or gas). Table 5.2 shows ΔG for the basic hydrogen fuel cell reaction

$$H_2 + \tfrac{1}{2}O_2 \rightarrow H_2O \tag{5.4}$$

for a number of different conditions. Note that the values are negative, which means that energy is released.

Table 5.2 ΔG for the reaction $H_2 + \frac{1}{2}O_2 \rightarrow H_2O$ at various temperatures

Form of water product	Temperature (°C)	ΔG (kJ mol^{-1})
Liquid	25	−237.2
Liquid	80	−228.2
Gas	80	−226.1
Gas	100	−225.2
Gas	200	−220.4
Gas	400	−210.3
Gas	600	−199.6
Gas	800	−188.6
Gas	1000	−177.4

If there are no losses in the fuel cell, or as we should more properly say, if the process is 'reversible', then *all* this Gibbs free energy is converted into electrical energy. We could thus define the efficiency of a fuel cell as

$$\frac{\text{electrical energy produced}}{\text{Gibbs free energy change}}$$

However, this is not very useful, and is rarely done, not least because the Gibbs free energy change is not constant.

Since a fuel cell uses materials that are usually burnt to release their energy, it would make sense to compare the electrical energy produced with the heat that would be produced by burning the fuel. This is sometimes called the 'calorific value', though a more precise description is the change in 'enthalpy of formation'. Its symbol is ΔH. As with the Gibbs free energy, the convention is that ΔH is negative when energy is released. So to get a good comparison with other fuel using technologies, the efficiency of the fuel cell is usually defined as

$$\frac{\text{electrical energy produced per mole of fuel}}{-\Delta H}$$

However, even this is not without its ambiguities, as there are two different values that we can use for ΔH. For the 'burning' of hydrogen

$$H_2 + \tfrac{1}{2}O_2 \rightarrow H_2O\ \text{(steam)}$$
$$\Delta H = -241.83\,\text{kJ mol}^{-1}$$

whereas if the product water is condensed back to liquid, the reaction is

$$H_2 + \tfrac{1}{2}O_2 \rightarrow H_2O\ \text{(liquid)}$$
$$\Delta H = -285.84\,\text{kJ mol}^{-1}$$

The difference between these two values for ΔH (44.01 kJ mol^{-1}) is the molar enthalpy of vaporisation[3] of water. The higher figure is called the 'higher heating value' (HHV), and the lower, quite logically, the 'lower heating value' (LHV). Any statement of efficiency should say whether it relates to the HHV or LHV. If this information is not given, the LHV has probably been used, since this will give a higher efficiency figure.

We can now see that there is a limit to the efficiency, if we define it as in Equation (5.4). The maximum electrical energy available is equal to the change in Gibbs free energy, so

$$\text{Maximum efficiency possible} = \frac{\Delta G}{\Delta H} \times 100\% \tag{5.5}$$

This maximum efficiency limit is sometimes known as the 'thermodynamic efficiency'. Table 5.3 gives the values of the efficiency limit, relative to the HHV, for a hydrogen fuel cell. The maximum voltage obtainable from a single cell is also given.

The graphs in Figure 5.9 show how these values vary with temperature, and how they compare with the 'Carnot limit', which is given by the equation

$$\text{Carnot limit} = \frac{T_1 - T_2}{T_1}$$

where T_1 is the higher temperature, and T_2 the lower, of the heat engine. The graph makes it clear that the efficiency limit of the fuel cell is certainly *not* 100%, as some supporters of fuel cells occasionally claim. Indeed, above about 750 °C the efficiency limit of the hydrogen fuel cell is actually less than for a heat engine. Nevertheless, the PEMFCs used in vehicles operate at about 80 °C, and so their theoretical maximum efficiency is actually much better than for an IC engine.

5.3.2 *Efficiency and the Fuel Cell Voltage*

A very useful feature of fuel cells is that their efficiency can be very easily found from their operating voltage. The reasoning behind this is as follows. If 1 mol of fuel is reacted in the cell, then 2 mol of electrons is pushed round the external circuit – this can be deduced

Table 5.3 ΔG, maximum EMF and efficiency limit (ref. HHV) for hydrogen fuel cells

Form of water product	Temperature (°C)	ΔG (kJ mol^{-1})	Maximum EMF (V)	Efficiency limit (%)
Liquid	25	−237.2	1.23	83
Liquid	80	−228.2	1.18	80
Gas	100	−225.3	1.17	79
Gas	200	−220.4	1.14	77
Gas	400	−210.3	1.09	74
Gas	600	−199.6	1.04	70
Gas	800	−188.6	0.98	66
Gas	1000	−177.4	0.92	62

[3] This used to be known as the molar 'latent heat'.

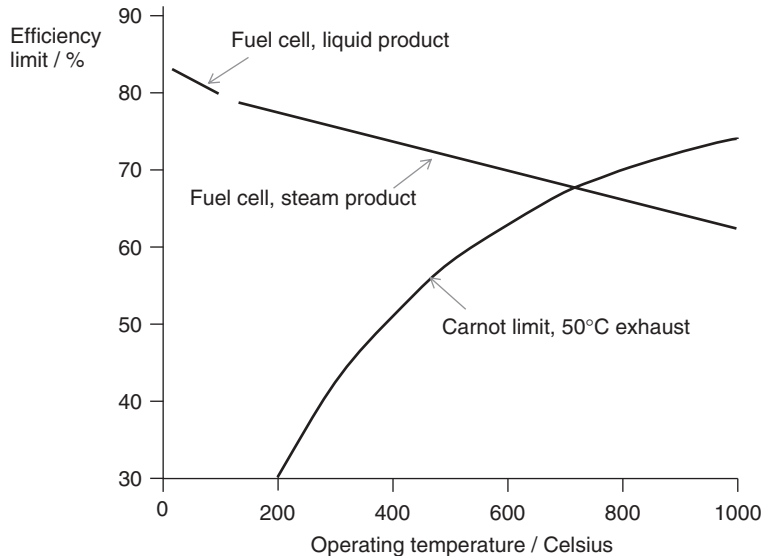

Figure 5.9 Maximum hydrogen fuel cell efficiency at standard pressure, with reference to the higher heating value. The Carnot limit is shown for comparison, with a 50 °C exhaust temperature

from Figure 5.3. We also know that the electrical energy is given by the fundamental energy equation

$$\text{Energy} = \text{charge} \times \text{voltage}$$

The Faraday constant F gives the charge on 1 mol of electrons. So, when 1 mol of hydrogen fuel is used in a fuel cell, if it were 100% efficient, as defined by Equation (5.4), then we would be able to say that

$$\text{Energy} = 2F \times V_{100\%} = \Delta H$$

and thus

$$V_{100\%} = \frac{\Delta H}{2F}$$

Using standard values for the Faraday constant (96 485 C), and the two values for ΔH given above, we can easily calculate that the '100% efficient' voltage for a single cell is 1.48 V if using the HHV or 1.25 V if using the LHV.

Now of course a fuel cell never is, and we have shown in the last section never can be, 100% efficient. The actual fuel cell voltage will be a lower value, which we can call V_c. Since voltage and electrical energy are directly proportional, it is clear that

$$\text{Fuel cell efficiency} = \frac{V_c}{V_{100\%}} = \frac{V_c}{1.48} \tag{5.6}$$

Clearly it is very easy to measure the voltage of a fuel cell. In the case of a stack of many cells, remember that the voltage of concern is the average voltage of *one* cell, so the system voltage should be divided by the number of cells. The efficiency can thus be found remarkably easily.

It is worth noting in passing that the maximum voltage of a fuel cell occurs when 100% of the Gibbs free energy is converted into electrical energy. Thus we have a 'sister' equation to Equation (5.4) giving the maximum possible fuel cell voltage:

$$V_{\max} = \frac{\Delta G}{2F} \tag{5.7}$$

This is also a very important fuel cell equation, and was used to find the figures shown in the fourth column of Table 5.3.

5.3.3 Practical Fuel Cell Voltages

Equation (5.7) above gives the maximum possible voltage obtainable from a single fuel cell. In practice the actual cell voltage is less than this. Now of course this applies to ordinary batteries too: as current is drawn out of any electric cell the voltage falls, due to internal resistances. However, with a fuel cell this effect is more marked than with almost all types of conventional cell. Figure 5.10 shows a typical voltage/current density curve for a good PEMFC. It can be seen that the voltage is always less, and often much less, than the 1.18 V that would be obtained if all of the Gibbs energy were converted into electrical energy.

There are three main reasons for this loss of voltage:

1. The energy required to drive the reactions at the electrodes, usually called the 'activation energy', causes a voltage drop. This is especially a problem at the air cathode, and shows itself as a fairly constant voltage drop. This explains the initial fall in voltage even at quite low currents.

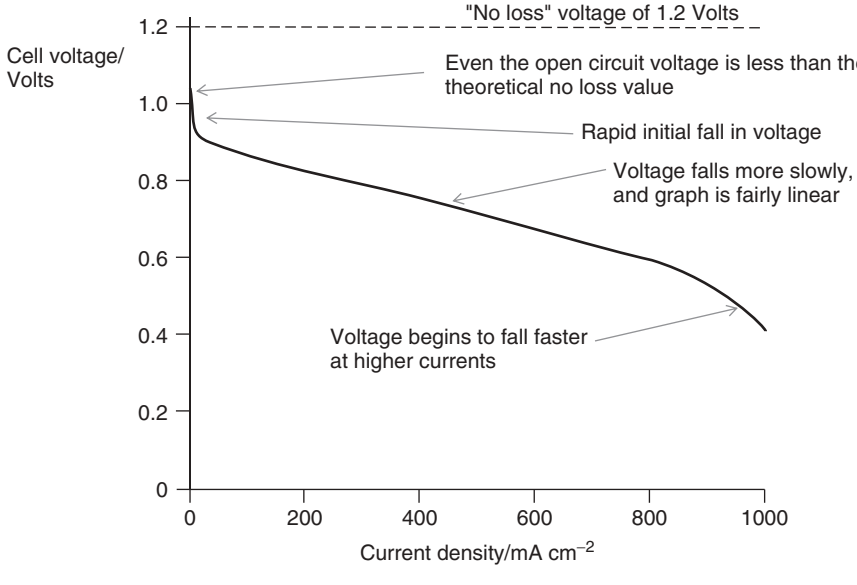

Figure 5.10 Graph showing the voltage from a typical good-quality PEMFC operating on air at about 80 °C

2. The resistance of the electrolyte and the electrodes causes a voltage drop that more or less follows Ohm's law, and causes the steady fall in voltage over the range of currents. This is usually called the 'ohmic' voltage loss.
3. At very high currents, the air gets depleted of oxygen, and the remnant nitrogen gets in the way of supplying fresh oxygen. This results in a fall in voltage, as the electrodes are short of reactant. This problem causes the more rapid fall in voltage at higher currents, and is called 'mass transfer' or 'concentration' voltage loss.

A result of the huge effort in fuel cell development over the last 10 years or so has resulted in a great improvement in the performance of fuel cells and a reduction in all these voltage losses. A fuel cell will typically operate at an average cell voltage of about 0.65–0.70 V, even at currents approaching $1\,\mathrm{A\,cm^{-2}}$. This represents an efficiency of about 50% (with respect to the HHV), which is considerably better than any IC engine, though some of the electrical energy is used up driving the fuel cell ancillary equipment to be discussed in the sections that follow.

We should point out that a consequence of the higher cell voltage at lower currents is that the efficiency is higher at lower currents. This is a marked contrast to the IC engine, where the efficiency is particularly poor at low powers.

In the opening section of this chapter we pointed out that a fuel cell could be compared with an IC engine running on hydrogen fuel, which would also give out very limited pollution. This section has shown that fuel cells do have the potential for a considerably higher efficiency than IC engines, and so they would, all other things being equal, be preferred. The problem is that 'all other things' are not equal. At the moment fuel cells are vastly more expensive than IC engines, and this might remain so for some time. It is by no means clear cut that fuel cells are the better option. A hydrogen-powered IC engine in a hybrid drive train would be not far behind a fuel cell in efficiency, and the advantages of proven and available technology might tip the balance against higher efficiency and even less pollution. Time will tell.

5.3.4 The Effect of Pressure and Gas Concentration

The values for the changes in the Gibbs free energy given in Tables 5.2 and 5.3 all concern pure hydrogen and oxygen, at standard pressure, 100 kPa. However, as well as changing with temperature, as shown in these tables, the Gibbs energy changes with pressure and concentration.

A full treatment of these issues is beyond a book such as this, and it can easily be found elsewhere (e.g. Larminie and Dicks, 2003, Ch. 2). Suffice to say that the relationship is given by a very important fuel cell equation derived from the work of Nernst. It can be expressed in many different forms, depending on what issue is to be analysed. For example, if the change of system pressure is the issue, then the 'Nernst equation' takes the form

$$\Delta V = \frac{RT}{4F} \ln\left(\frac{P_2}{P_1}\right) \tag{5.8}$$

where ΔV is the voltage increase if the pressure changes from P_1 to P_2. Other causes of voltage change are a reduction in voltage caused by using air instead of pure oxygen.

The use of hydrogen fuel that is mixed with carbon dioxide, as is obtained from the 'reforming' of fuels such as petrol, methanol or methane (as described in Chapter 6), also causes a small reduction in voltage.

For high-temperature fuel cells the Nernst equation very well predicts the voltage changes. However, with lower temperature cells, such as are used in EVs, the changes are nearly always considerably greater than the Nernst equation predicts. This is because the 'activation voltage drop' mentioned in the previous section is also quite strongly affected by issues such as gas concentration and pressure. This is especially the case at the air cathode.

For example, Equation (5.8) would predict that for a PEMFC working at 80 °C, the voltage increase resulting from a doubling of the system pressure would be

$$\Delta V = \frac{8.314 \times (273 + 80)}{4 \times 96\,485} \ln(2) = 0.0053\,\text{V per cell}$$

However, in practice the voltage increase would typically be about 0.04 V, nearly 10 times as much. Even so, we should note that the increase is still not large, and that there is considerable energy cost in running the system at higher pressure. Indeed, it is shown elsewhere (e.g. Larminie and Dicks, 2003, Ch. 4) that the energy gained from a higher voltage is very unlikely to be greater than the energy loss in pumping the air to higher pressure.

Nevertheless, it is the case that most PEMFCs in vehicle applications *are* run at a pressure distinctly above air pressure, typically between 1.5 and 2.0 bar. The reasons for this are not primarily because of increasing the cell voltage. Rather, they are because it makes the water balance in the PEMFC much easier to maintain. This complicated issue is explained in Section 5.5 below.

5.4 Connecting Cells in Series – The Bipolar Plate

As has been pointed out in the previous section, the voltage of a working fuel cell is quite small, typically about 0.7 V when drawing a useful current. This means that to produce a useful voltage many cells have to be connected in series. Such a collection of fuel cells in series is known as a 'stack'. The most obvious way to do this is by simply connecting the edge of each anode to the cathode of the next cell all along the line, as in Figure 5.11. (For simplicity, this diagram ignores the problem of supplying gas to the electrodes.)

The problem with this method is that the electrons have to flow across the face of the electrode to the current collection point at the edge. The electrodes might be quite good conductors, but if each cell is only operating at about 0.7 V, even a small voltage drop is important. Unless the current flows are very low, and the electrode a particularly good conductor, or very small, this method is not used.

The method of connecting to a single cell, all over the electrode surfaces, while at the same time feeding hydrogen to the anode and oxygen to the cathode, is shown in Figure 5.12. The grooved plates are made of a good conductor such as graphite or stainless steel. This idea is then extended to the 'bipolar plate' shown in Figure 5.13. These make connections all over the surface of one cathode and also the anode of the next cell (hence 'bipolar'). At the same time the bipolar plate serves as a means of feeding oxygen to the cathode and hydrogen to the anode. A good electrical connection must be made between the two electrodes, but the two gas supplies must be strictly separated, otherwise a dangerous hydrogen/oxygen mixture will be produced.

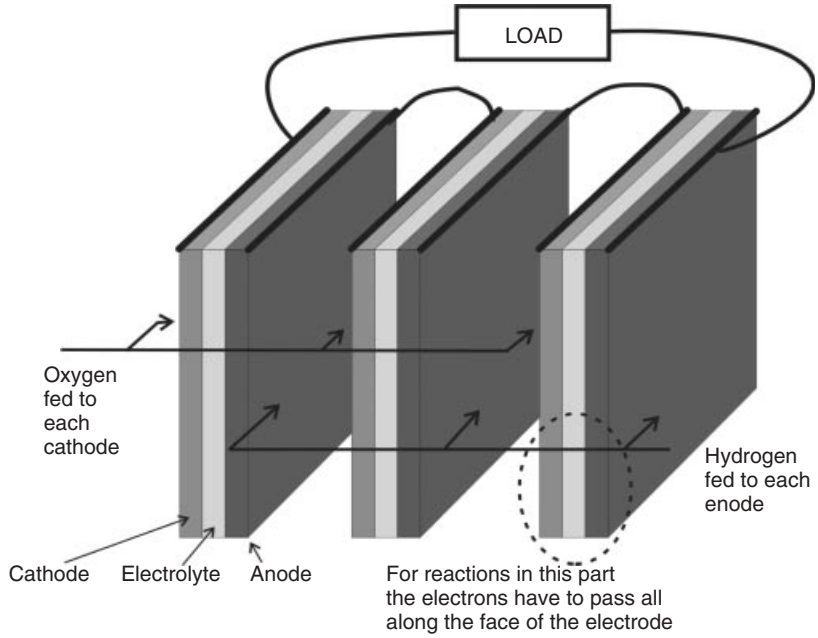

Figure 5.11 Simple edge connection of three cells in series

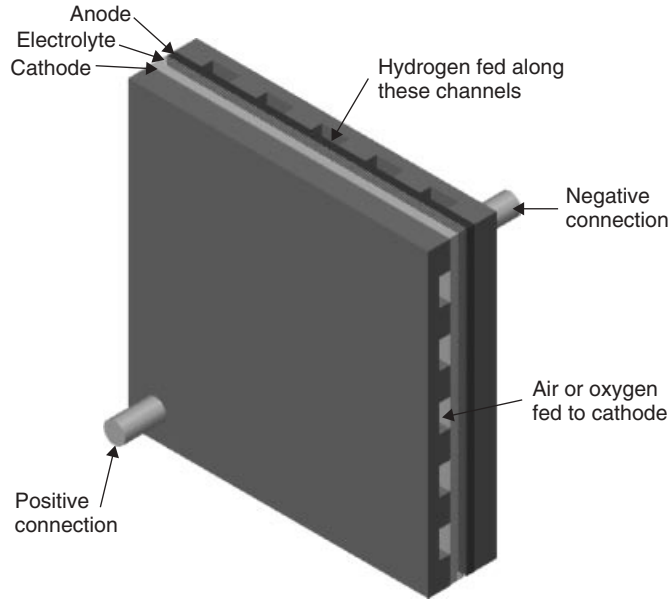

Figure 5.12 Single cell, with end plates for taking the current from all over the face of the electrodes, and also supplying gas to the whole electrode

However, this simple type of bipolar plate shown in Figure 5.13 will not do for PEMFCs. Because the electrodes must be porous (to allow the gas in) they would allow the gas to leak out of their edges. The result is that the edges of the electrodes must be sealed. This is done by making the electrolyte somewhat larger than the electrodes, and fitting a sealing gasket around each electrode, as shown in Figure 5.14.

Rather than feeding the gas in at the edge, as in Figures 5.12 and 5.13, a system of 'internal manifolding' is used with PEMFCs. This arrangement requires a more complex bipolar plate, and is shown in Figure 5.15. The plates are made larger relative to the electrodes, and have extra channels running through the stack which feed the fuel and oxygen to the electrodes. Carefully placed holes feed the reactants into the channels that run over the surface of the electrodes. This results in a fuel cell stack that has the appearance of a solid block, with the reactant gases fed in at the ends, where the positive and negative connections are also made.

Figure 5.16 shows a fairly high-power PEMFC system. It consists of four stacks made as described above – each a block of approximately square cross-section.

A further complication is that the bipolar plates also have to incorporate channels in them for cooling water or air to pass through, as fuel cells are not 100% efficient and generate heat as well as electricity.

It should now be clear that the bipolar plate is quite a complex item. A fuel cell stack, such as those of Figure 5.16, will have up to 80 cells in series, and so a large number will be needed. As well as being a fairly complex item to make, the question of its material is often difficult. Graphite, for example, can be used, but this is difficult to work and brittle. Stainless steel can also be used, but this will corrode in some types of fuel cell. For forming the gas flow paths, and making the plates quickly and cheaply, plastic would be ideal. However, the bipolar plate would much clearly be a very good conductor of electricity, and this is a great difficulty for plastics. The present situation is that no entirely satisfactory way of making these items has yet been developed, but many of the

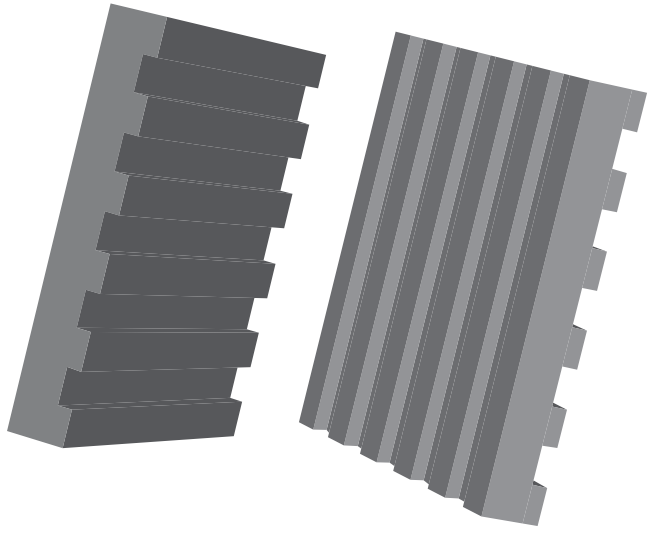

Figure 5.13 Two bipolar plates of very simple design. There are horizontal grooves on one side and vertical grooves on the other

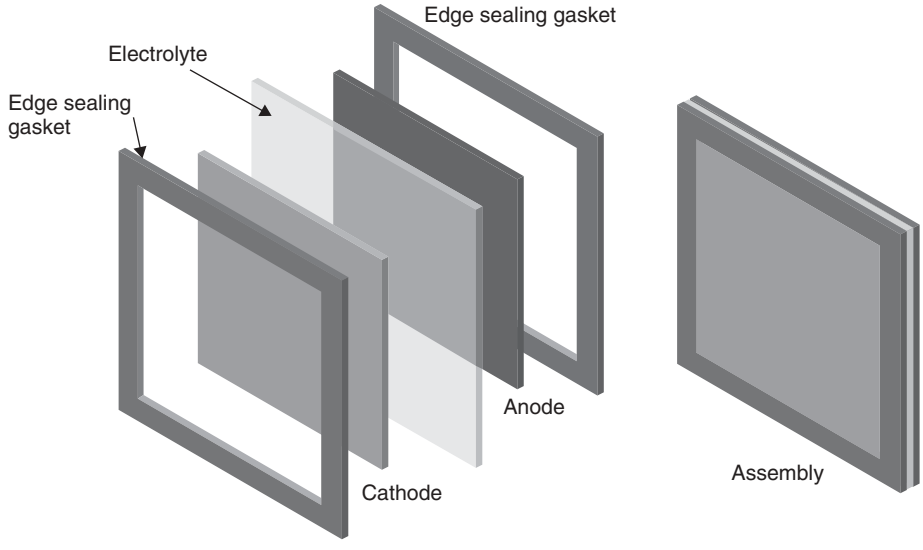

Figure 5.14 The construction of anode–electrolyte–cathode assemblies with edge seals. These prevent the gases leaking out of the edge of the porous electrodes

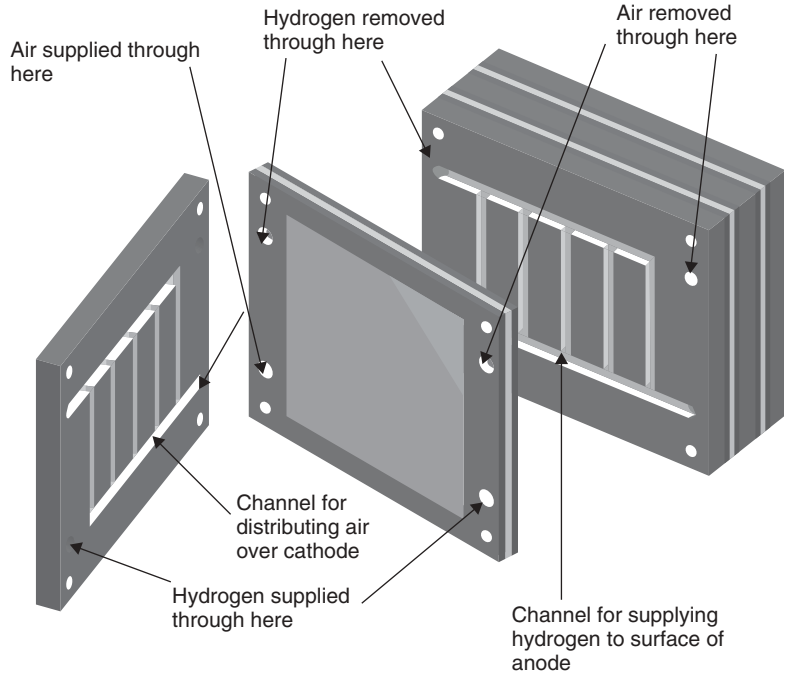

Figure 5.15 A simple bipolar plate with internal manifolding, as is usually used in PEMFCs. The reactant gases are fed to the electrodes through internal tubes

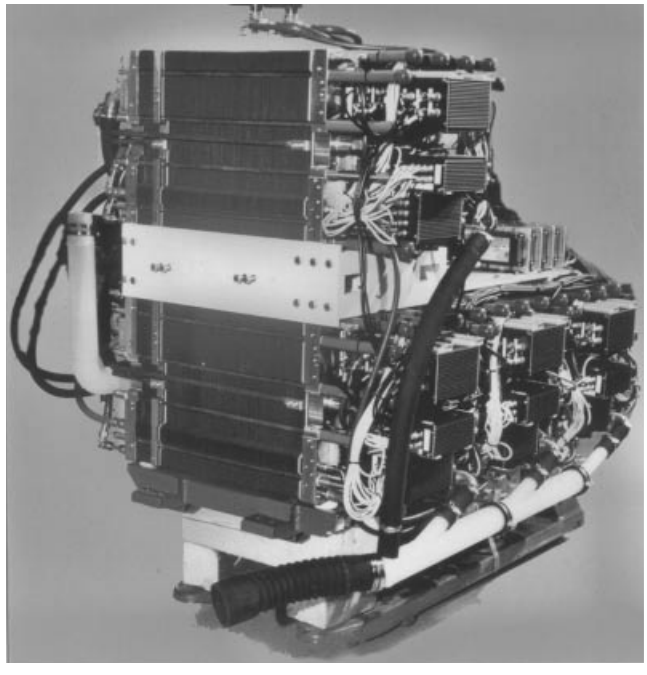

Figure 5.16 An example of a fairly large PEMFC system. Four separate fuel cell stacks can be seen. Each consists of 160 cells in series. (Reproduced by kind permission of MAN Nutzfahrzeuge AG. This is the fuel cell stack from the bus shown in Figure 5.2, and is made by Siemens.)

most promising options are discussed elsewhere, such as in Ruge and Büchi (2001). It is certainly the case now, and will be for many years, that the bipolar plate makes a major contribution to the cost of a fuel cell, as well as its size and its weight.

Anyone who has made fuel cells knows that *leaks* are a major problem. If the path of hydrogen through a stack using internal manifolding (as in Figure 5.15) is imagined, the possibilities for the gas to escape are many. The gas must reach the edge of every porous electrode – so the entire edge of every electrode is a possible escape route, both under and over the edge gasket. Other likely trouble spots are the joins between each and every bipolar plate. In addition, if there is the smallest hole in any of the electrolyte, a serious leak is certain.

The result is that a fuel cell is quite a difficult system to manufacture, requiring parts that are complex to form rapidly and cheaply. Very careful assembly is required, and each fuel cell stack consists of a large number of components. The system has a very low level of fault tolerance.

5.5 Water Management in the PEMFC

5.5.1 Introduction to the Water Problem

We saw in Figure 5.3 the different electrode reactions in a fuel cell. Looking back at this diagram, it can be seen that the water product from the chemical reaction is made on the positive electrode, where air is supplied.

This is very convenient. It means that air can be supplied to this electrode, and as it blows past it will supply the necessary oxygen and also evaporate the product water and carry it off, out of the fuel cell.

This is indeed what happens, in principle, in the PEMFC. However, the details are unfortunately far more complex and much more difficult to manage. The reasons for this require that we understand in some detail the operation of the electrolyte of a PEMFC.

5.5.2 The Electrolyte of a PEMFC

The different companies producing polymer electrolyte membranes have their own special tricks, mostly proprietary. However, a common theme is the use of sulfonated fluoropolymers, usually fluoroethylene. The most well known and well established of these is Nafion (from Dupont), which has been developed through several variants since the 1960s. This material is still the electrolyte against which others are judged, and is in a sense an 'industry standard'. Other polymer electrolytes function in a similar way.[4]

The construction of the electrolyte material is as follows. The starting point is the basic, simplest to understand, human-made polymer – polyethylene. Based on ethylene, its molecular structure is shown in Figure 5.17.

This basic polymer is modified by substituting fluorine for the hydrogen. This process is applied to many other compounds, and is called 'perfluorination'. The 'mer' is called 'tetrafluoroethylene'.[5] The modified polymer, shown in Figure 5.18, is polytetrafluoroethylene, or PTFE. It is also sold as Teflon, the registered trademark of Dupont. This remarkable material has been very important in the development of fuel cells. The strong bonds between the fluorine and the carbon make it highly resistant to chemical attack and durable. Another important property is that it is strongly hydrophobic, and so it is used in fuel cell electrodes to drive the product water out of the electrode, and thus prevent flooding. It is used in this way in PAFCs and alkali fuel cells, as well as PEMFCs. (The same property gives it a host of uses in outdoor clothing and footwear.)

However, to make an electrolyte, a further stage is needed. The basic PTFE polymer is 'sulfonated' – that is, a side chain is added, ending with sulfonic acid HSO_3. Sulfonation

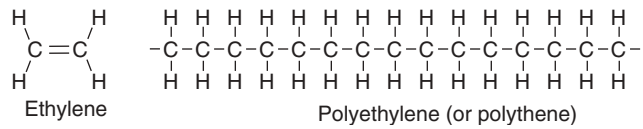

Figure 5.17 The structure of polyethylene

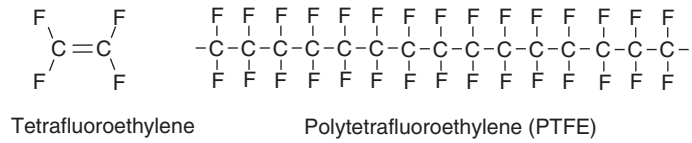

Figure 5.18 The structure of PTFE

[4] For a review of work with other types of PEM, see Rozière and Jones (2001).

[5] 'Tetra' indicates that all four hydrogens in each ethylene group have been replaced by fluorine.

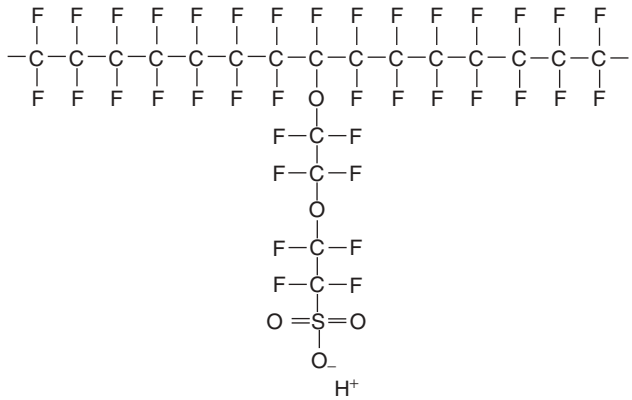

Figure 5.19 Example structure of a sulfonated fluoroethylene, also called perfluorosulfonic acid PTFE copolymer

of complex molecules is a widely used technique in chemical processing. It is used, for example, in the manufacture of detergent. One possible side chain structure is shown in Figure 5.19 – the details vary for different types of Nafion and with different manufacturers of these membranes. The methods of creating and adding the side chains are proprietary, though one modern method is discussed in Kiefer *et al*. (1999).

The HSO_3 group added is ionically bonded, and so the end of the side chain is actually an SO_3^- ion. The result of the presence of these SO_3^- and H^+ ions is that there is a strong mutual attraction between the + and – ions from each molecule. The result is that the side chain molecules tend to 'cluster' within the overall structure of the material. Now, a key property of sulfonic acid is that it is highly hydrophilic – it attracts water. (This is why it is used in detergent: it makes one end of the molecule mix readily with water, while the other end attaches to the dirt.) In effect, this means we are creating hydrophilic regions within a generally hydrophobic substance, which is bound to create interesting results.

The hydrophilic regions around the clusters of sulfonated side chains can lead to the absorption of large quantities of water, increasing the dry weight of the material by up to 50%. Within these hydrated regions the H^+ ions are relatively weakly attracted to the SO_3^- group, and are able to move. This creates what is essentially a dilute acid. The resulting material has different phases – dilute acid regions within a tough and strong hydrophobic structure. This is illustrated in Figure 5.20. Although the hydrated regions are somewhat separate, it is still possible for the H^+ ions to move through the supporting long-molecule structure. However, it is easy to see that for this to happen the hydrated regions must be as large as possible. In a well-hydrated electrolyte there will be about 20 water molecules for each SO_3^- side chain. This will typically give a conductivity of about $0.1\,\mathrm{S\,cm^{-1}}$. As the water content falls, so the conductivity falls in a more or less linear fashion.

From the point of view of fuel cell use, the main features of Nafion and other fluorosulfonate ionomers are that:

- they are highly chemically resistant;
- they are mechanical strong, and so can be made into very thin films, down to 50 μm;
- they are acidic;

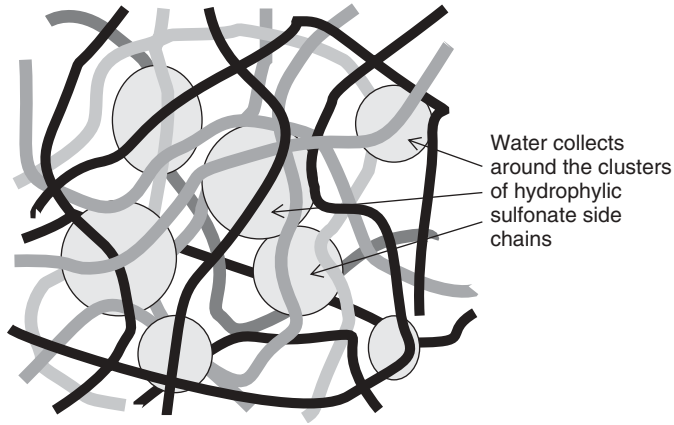

Figure 5.20 The structure of Nafion-type membrane materials. Long-chain molecules containing hydrated regions around the sulfonated side chains

- they can absorb large quantities of water;
- if they are well hydrated, then H^+ ions can move quite freely within the material – they are good proton conductors.

This material then is the basis of the PEMFC. It is not cheap to manufacture, but costs could fall if production was on a really large scale. The key point to remember for the rest of this section is that for the electrolyte to work properly, it *must* be very well hydrated.

5.5.3 Keeping the PEM Hydrated

It will be clear from the description of a PEM given in the previous section that there must be sufficient water content in the polymer electrolyte. The proton conductivity is directly proportional to the water content. However, there must not be so much water that the electrodes, which are bonded to the electrolyte, flood, blocking the pores in the electrodes or gas diffusion layer. A balance is therefore needed, which takes care to achieve.

In the PEMFC water forms at the cathode (revisit Figure 5.3 if you are not sure why). In an ideal world this water would keep the electrolyte at the correct level of hydration. Air would be blown over the cathode, and as well as supplying the necessary oxygen it would dry out any excess water. Because the membrane electrolyte is so thin, water would diffuse from the cathode side to the anode, and throughout the whole electrolyte a suitable state of hydration would be achieved without any special difficulty. This happy situation can sometimes be achieved, but needs good engineering design to bring to pass.

There are several complications. One is that during operation of the cell the H^+ ions moving from the anode to the cathode (see Figure 5.3) pull water molecules with them. This process is sometimes called 'electro-osmotic drag'. Typically between one and five water molecules are 'dragged' for each proton (Zawodzinski *et al.*, 1993; Ren and Gottesfeld, 2001). This means that, especially at high current densities, the anode side of the electrolyte can become dried out – even if the cathode is well hydrated. Another major

problem is that the water balance in the electrolyte must be correct throughout the cell. In practice, some parts may be just right, others too dry, and others flooded. An obvious example of this can be seen if we think about the air as it passes through the fuel cell. It may enter the cell quite dry, but by the time it has passed over some of the electrodes it may be about right. However, by the time it has reached the exit it may be so saturated it cannot dry off any more excess water. Obviously, this is more of a problem when designing larger cells and stacks.

Yet another complication is the drying effect of air at high temperatures. If the PEMFC is operating at about 85 °C, then it becomes very hard not to dry out the electrolyte. Indeed, it can be shown[6] that at temperatures of over about 65 °C the air will *always* dry out the electrodes faster than water is produced by the H_2/O_2 reaction. However, operation at temperatures of about 85 °C or so is essential if enough power is to be extracted for automotive applications.

The only way to solve these problems is to humidify the air, the hydrogen or both, before they enter the fuel cell. This may seem bizarre, as it effectively adds by-product to the inputs to the process, and there cannot be many other processes where this is done. However, in the larger, warmer PEMFCs used in vehicles this is always needed.

This adds an important complication to a PEMFC system. The technology is fairly straightforward, and there are many ways in which it can be done. Some methods are very similar to the injection of fuel into the air stream of IC engines. Others are described in fuel cell texts. However, it will certainly add significantly to the system size, complexity and cost.

The water that is added to the air or hydrogen must come from the air leaving the fuel cell, so an important feature of an automotive fuel cell system will be a method of condensing out some of the water carried out by the damp air leaving the cell.

A further impact that the problem of humidifying the reactant gases has on the design of a PEMFC system is the question of operating pressure. Previously it was pointed out that raising the system pressure increases fuel cell performance, but only rarely does the gain in power exceed the power required to compress the reactant air. However, the problem of humidifying the reactant gases, and of preventing the electrolyte drying out, becomes much less if the cell is pressurised. The precise details of this are proved elsewhere,[7] but suffice to say here that if the air is compressed, then much less water needs to be added to raise the water vapour pressure to a point where the electrolyte remains well hydrated. Indeed there is some synergy between compressing the reactant gases and humidifying them, as compression (unless very slow) invariably results in heating. This rise in temperature promotes the evaporation of water put into the gas stream, and the evaporation of the water cools that gas, and prevents it from entering the fuel cell too hot.

5.6 Thermal Management of the PEMFC

It might be supposed that the cooling problem of a fuel cell would be simpler than for IC engines. Since they are more efficient, then less heat is generated, and so there is less heat to dispose of. Unfortunately, however, this is not the case.

[6] Büchi and Srinivasan (1997).
[7] Larminie and Dicks (2003, Ch. 4).

It is true that there is somewhat less heat energy produced. A fuel cell system will typically be about 40% efficient, compared with about 20% for an IC engine. However, in an IC engine a high proportion of the waste heat simply leaves the system in the exhaust gas.

With a fuel cell the oxygen-depleted and somewhat damper air that leaves the cell will only be heated to about 85 °C, and so will carry little energy. In addition, compared with an IC engine, the external surface is considerably cooler, and so far less heat is radiated and conducted away through that route.

The result is that the cooling system has to remove at least as much heat as with an IC engine, and usually considerably more.

In very small fuel cells the waste heat can be removed by passing excess air over the air cathode. This air then supplies oxygen, carries away the product water and cools the cell. However, it can be shown that this is only possible with fuel cells of power up to about 100 W. At higher powers the air flow needed is too great, and far too much water would be evaporated, so the electrolyte would cease to work properly for the reasons outlined in the previous section. Such small fuel cells have possible uses with portable electronics equipment, but are not applicable to EVs.

The next stage is to have two air flows through the fuel cell. One is the 'reactant air' flowing over the fuel cell cathodes. This will typically be at about twice the rate needed to supply oxygen, so it never becomes too oxygen depleted, but does not dry out the cell too much. The second will be the 'cooling air'. This will typically blow through channels in the bipolar plates, as shown in Figure 5.21.

This arrangement works satisfactorily in fuel cells of power up to 2 or 3 kW. Such fuel cells might one day find use in electric scooters. However, for the higher power cells to be used in cars and buses it is too difficult to ensure the necessary even air flow through the system. In this case a cooling fluid needs to be used. Water is the most common, as it has good cooling characteristics, is cheap, and the bipolar plates have in any case to be made of a material that is corrosion resistant

The extra cooling channels for the water (or air) are usually introduced into the bipolar plate by making it in two halves. The gas flow channels shown in Figure 5.21 are made on one face, with the cooling water channels on the other. Two halves are then joined together, giving cooling fluid channels running through the middle of the completed bipolar plate. The cooling water will then need to be pumped through a conventional heat exchanger or 'radiator', as in an IC engine. The only difference is that we will need to dispose of about twice as much heat as that of the equivalent size of IC engine.

Because larger 'radiators' are sometimes needed for fuel cells, some imagination is needed in their design and positioning. In the ground-breaking General Motors Hy-wire design, which can also be seen in Figure 5.1, large cooling fins are added to the side of the vehicle,[8] as shown in Figure 5.22.

5.7 A Complete Fuel Cell System

In Section 5.2 we explained how a fuel cell worked. We saw that, in essence, it is very simple. Hydrogen is supplied to one electrode, oxygen to the other, and electricity

[8] Note that this vehicle can also be seen in Figure 9.16 but this is a somewhat different version, which has more conventional cooling arrangements.

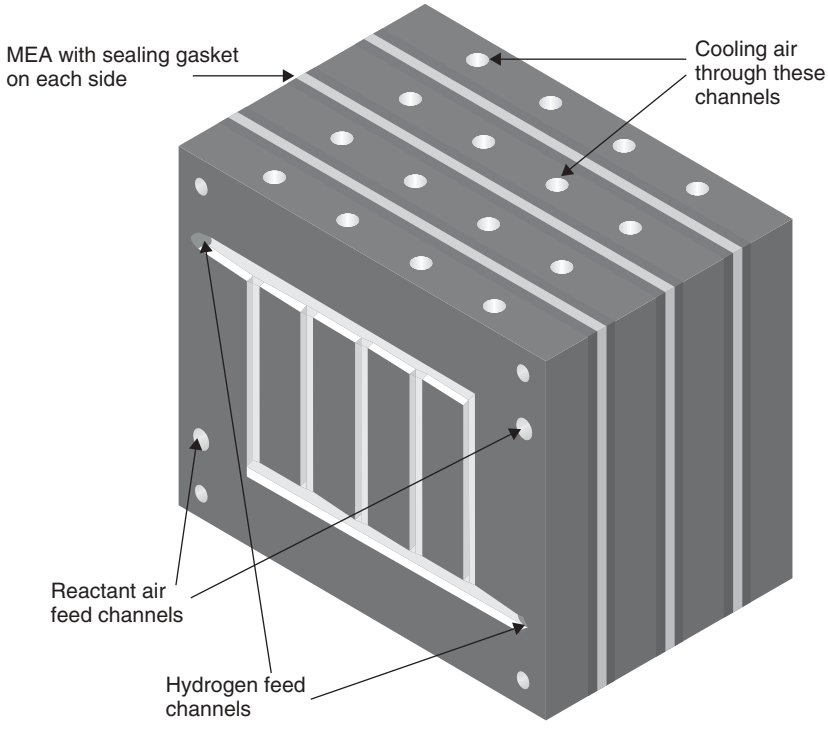

Figure 5.21 Three cells from a PEMFC stack where the bipolar plates incorporate channels for cooling air, in addition to channels for reactant air over the electrodes

Figure 5.22 Solid metal cooling fins on the side of a GM Hy-wire demonstration fuel cell vehicle

is produced. Pure water is the only by-product. However, in the following sections we went on to show that in practice a fuel cell is a complex system. They are difficult to make. The water balance and temperature require careful control. They consist of much more than just electrodes and electrolyte. These 'extras' are sometimes called the 'balance of plant' (BOP).

On all but the smallest fuel cells the air and fuel will need to be circulated through the stack using *pumps* or *blowers*. In vehicles *compressors* will be used, which will be linked with the *humidification system* (Section 5.5). To keep this working properly, there will need to be a *water recovery* system. A *cooling system* will be needed (Section 5.6).

The DC output of a fuel cell stack will rarely be suitable for direct connection to an electrical load, and so some kind of *power conditioning* is nearly always needed. This may be as simple as a voltage regulator, or a *DC/DC converter*.[9] *Electric motors* too will nearly always be a vital part of a fuel cell system, driving the pumps, blowers and compressors mentioned above.

Various *control valves* will usually be needed, as well as *pressure regulators*. An electronic *controller* will be needed to coordinate the parts of the system. A special problem the controller has to deal with is the startup and shutdown of the fuel cell system, as this can be a complex process.

This very important idea of the 'BOP' is illustrated in Figure 5.23, which is the fuel cell engine from a car. It uses hydrogen fuel, and the waste heat is only used to warm the car interior. The fuel cell stacks are the rectangular blocks on the left of the picture. The rest of the unit (pumps, humidifier, power electronics, compressor) takes up well over half the volume of the whole system.

The presence of all this BOP has important implications for the efficiency of a fuel cell system, as nearly all of it requires energy to run. Back in Section 5.3.2 we saw that the efficiency of a fuel cell rises substantially if the current falls, as it is proportional to

Figure 5.23 The 75 kW (approx.) fuel cell system used, for example, in the Mercedes A Class. (Reproduced by kind permission of Ballard Power Systems.)

[9] Together with electric motors, these circuits are explained in Chapter 6.

the operating voltage. However, when the BOP is included, this effect is largely wiped out. The power consumed by the ancillaries does not usually fall in proportion to the current, and in some cases it is fairly constant. The result is that over a very broad range of operating powers the efficiency of most fuel cell systems, such as that of Figure 5.23, is more or less constant.

One aspect of fuel cells that we have not addressed so far is the very important question of 'Where does the hydrogen come from?' This is an important and wide-ranging topic, and will be explored in the next chapter.

5.8 Practical Efficiency of Fuel Cells

As with batteries the energy efficiency is not 100%. The efficiency of a fuel cell (electrical energy obtained from the fuel cell/the energy in the hydrogen supplied to the fuel cell) is generally between 40 and 60%. The rest is emitted as heat which could be captured for the vehicle fuel system.

References

Büchi, F.N. and Srinivasan, S. (1997) Operating proton exchange membrane fuel cells without external humidification of the reactant gases: fundamental aspects. *Journal of the Electrochemical Society*, **144** (8), 2767–2772.

Kiefer, J., Brack, H.P., Huslage, J. *et al*. (1999) Radiation grafting: a versatile membrane preparation tool for fuel cell applications. Proceedings of the European Fuel Cell Forum Portable Fuel Cells Conference, Lucerne, pp. 227–235.

Larminie, J. and Dicks, A. (2003) *Fuel Cell Systems Explained*, 2nd edn, John Wiley & Sons, Ltd, Chichester.

Ren, X. and Gottesfeld, S. (2001) Electro-osmotic drag of water in a poly(perfluorosulphonic acid) membrane. *Journal of the Electrochemical Society*, **148** (1), A87–A93.

Rozière, J. and Jones, D. (2001) Recent progress in membranes for medium temperature fuel cells. Proceedings of the First European PEFC Forum (EFCF), pp. 145–150.

Ruge, M. and Büchi, F.N. (2001) Bipolar elements for PE fuel cell stacks based on the mould to size process of carbon polymer mixtures. Proceedings of the First European PEFC Forum (EFCF), pp. 299–308.

Zawodzinski, T.A., Derouin, C., Radzinski, S. *et al*. (1993) Water uptake by and transport through Nafion 117 membranes. *Journal of the Electrochemical Society*, **140** (4), 1041–1047.